Status: 02/2026

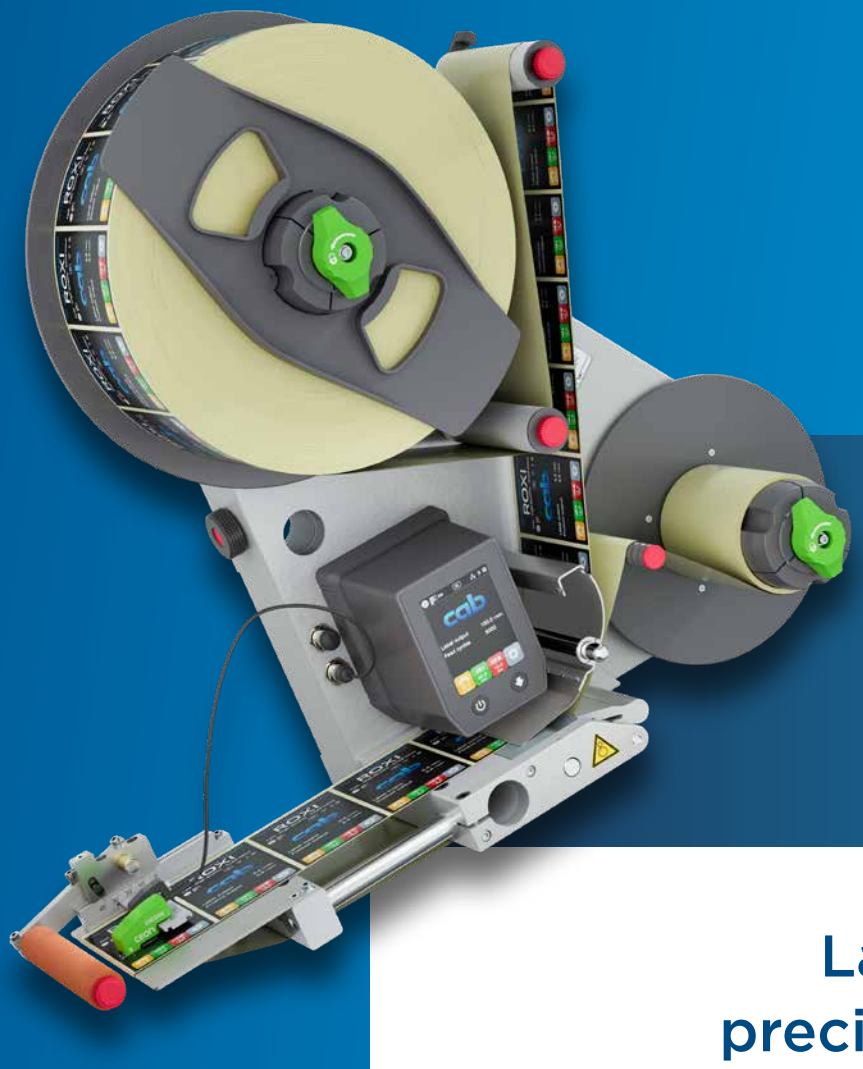

ROXI and IXOR+

Labeling heads for precise insert labeling

Made in Germany

Overview of labeling heads

ROXI IXOR+

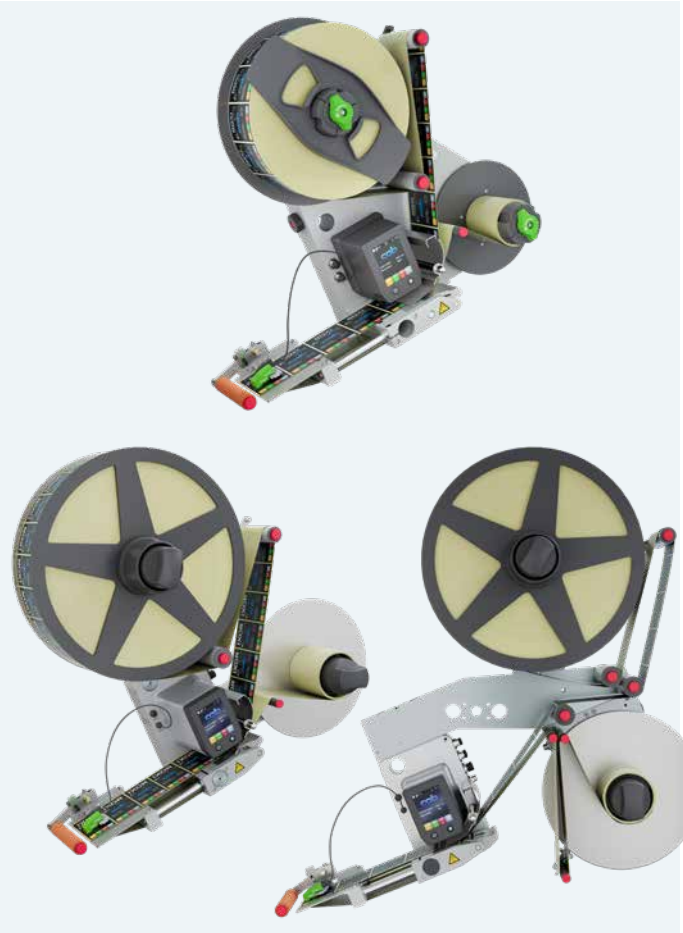

ROXI labeling heads

for label webs running as fast as 30 m/min

Roll diameter	max. 310 mm
Width of material	max. 180 mm

IXOR+ labeling heads

for label webs running as fast as
- 50 m/min with a mechanical unwinder and a mechanical rewinder
- 75 m/min with a mechanical unwinder, motoric rewinder
- 120 m/min with a motoric unwinder and a motoric rewinder, 200 m/min upon request

Modular construction; rewinders / unwinders can be assembled independent from a base unit

Roll diameters	max. 410 mm / 510 mm upon request
Widths of material	max. 186 mm / 248 mm, 310 mm upon request

Peripherals

SPX print modules and loop control

installed at a minimum depth of 85 mm behind the material-locating edge

for ROXI, IXOR and IXOR+ labeling heads
Technical data correspond with PX Q print modules
Available from quarter 2/2026
See separate data sheet of SPX print modules

HERMES HQ applicators

for labeling items at rest

for ROXI labeling heads
Technical data correspond with HQ applicators
See separate data sheet

Labeling heads by comparison

ROXI IXOR+

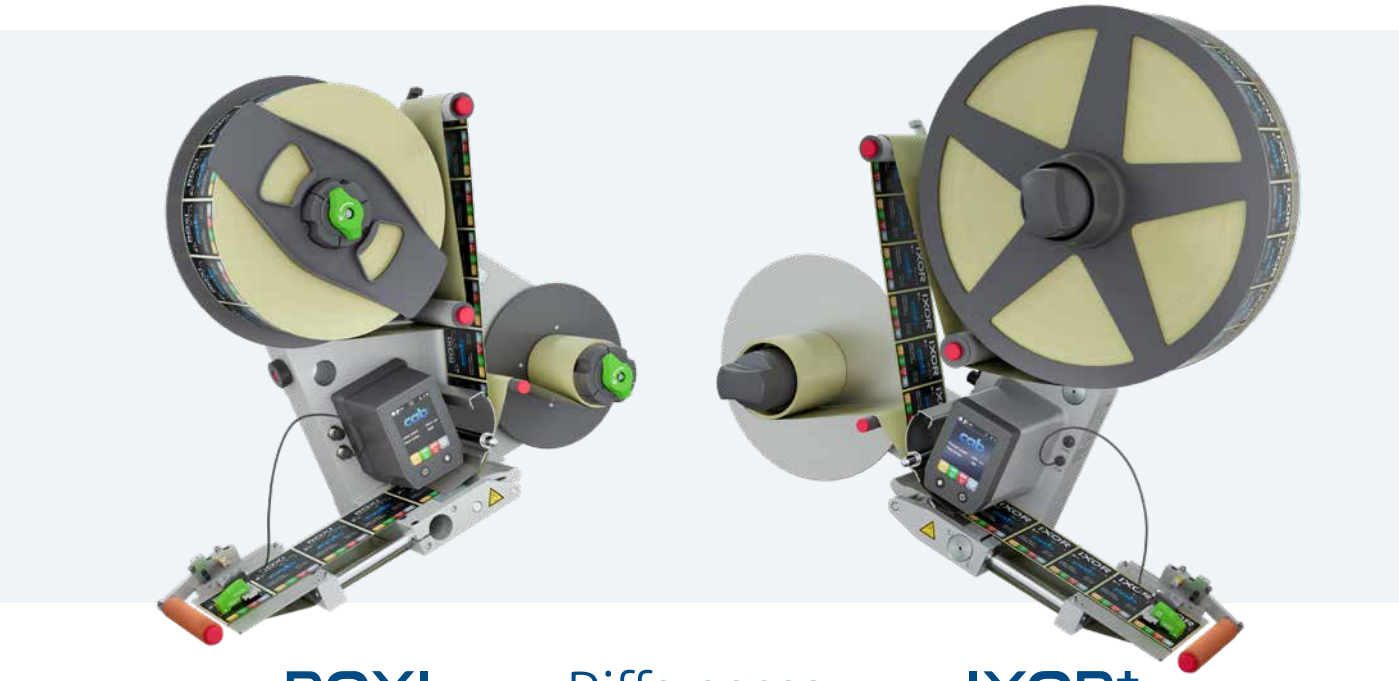

ROXI Differences IXOR+

ROXI		IXOR+
One unit for any application	**Design**	Modular; rewinders / unwinders can be assembled independent from a base unit
as fast as 30 m/min	**Label web speed**	as fast as 120 m/min (200 m/min upon request)
Roll diameter max. 310 mm	**Unwinders**	Roll diameter max. 410 mm / 510 mm upon request
vertical and horizontal, as requested	**Installation**	Vertical, taking an extended sleeve retainer into consideration for margin stop
IP 40: Protected against solid foreign objects Ø 1.0 mm and larger Not protected against water	**Protection class**	IP 66: Dustproof Protected against powerful water jets
Cold device socket	**Power supply**	M12 circular connector
RJ45	**Ethernet**	M12 circular connector
Two A type USB hosts	**APPLY**	M12 circular connector for one USB host (via adapter cable) Peripheral interface for connecting a printer and controlling a label transfer unit Configurable I/O interface with two inputs and one output

Common features

Installation dimensions
Firmware
User interface
Demand modules
Wipe-down rollers
Sensors
Interfaces
Accessories
Assembly assistance

Labeling head

ROXI

Precise insert labeling

Solid construction, perfect in every way

Advanced electronics and software

Small price – great performance

A future-proof investment

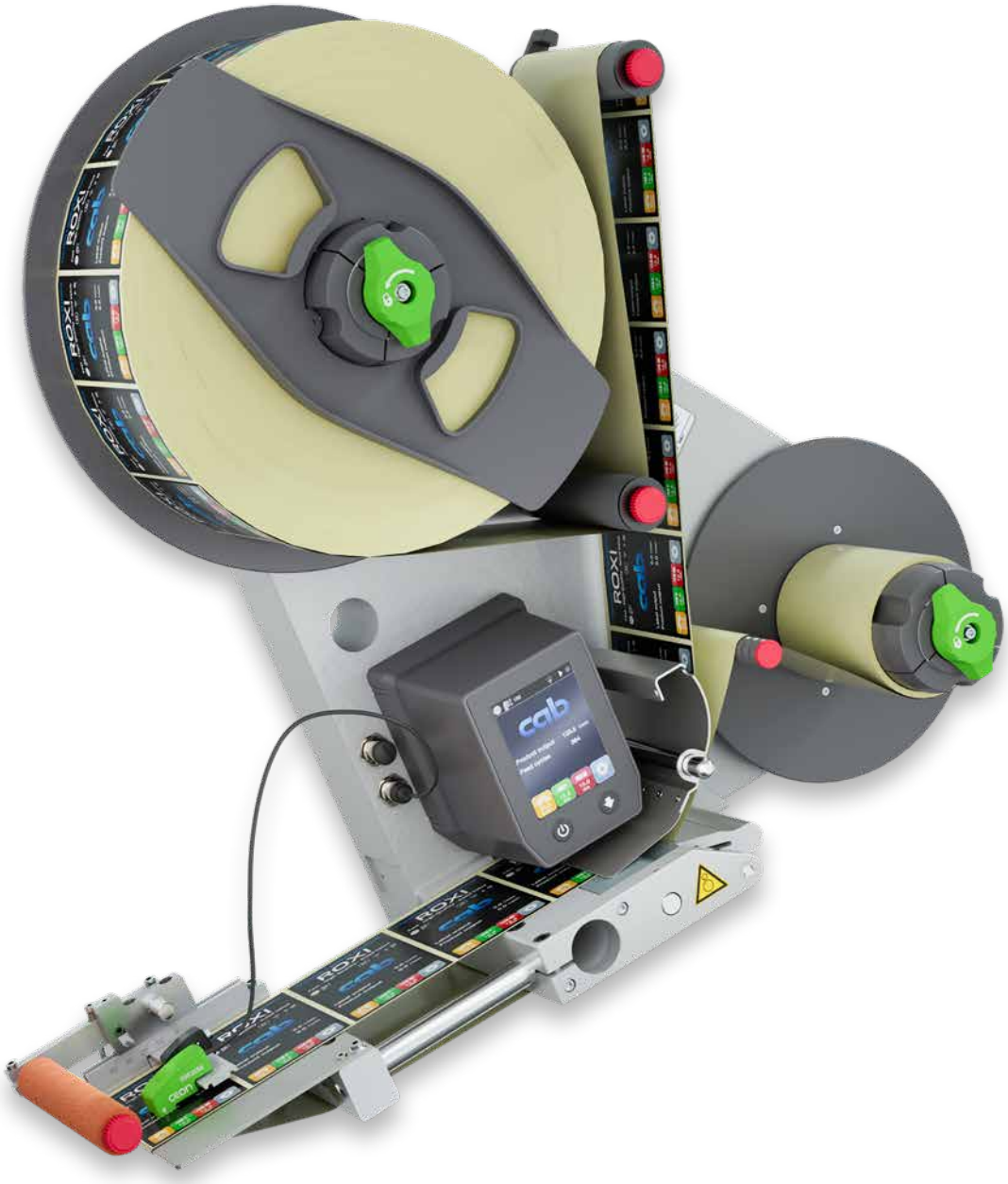

Compact and slim design
Easy to install into production lines or labeling systems

Any assembly
Vertical, horizontal, inclined, providing labels to the left or right

High quality and reliability
Tried and tested functional modules Made in Germany

Durable and easy to maintain
Designed for continuous industrial use
Free firmware updates via Ethernet, USB interface or FTP software

Dynamic speed control
A label web is fed automatically by a masterencoder (rotary → linear upon request) synchronous to the speed of an item on a conveyor.

Safety guaranteed
Certified by independently authorized testing labs

Short setup times
Quick and simple material changeover

Useful accessories
Columns, stands, connecting cables, and many others help with installation ready for use.

Labeling head

Mechanical unwinders and rewinders

for label webs running as fast as 50 m/min
Roll diameters 310 mm and 410 mm
Unwinders and demand units can be assembled also independent from a base unit

Vertical installation:
The sleeve core is extended by 62 mm relative to the rewinder to accommodate and clamp the counterholder.
The labeling head can also be assembled horizontally.

Horizontal installation:
There is no counterholder. The sleeve cores of the unwinder and rewinder are the same length.

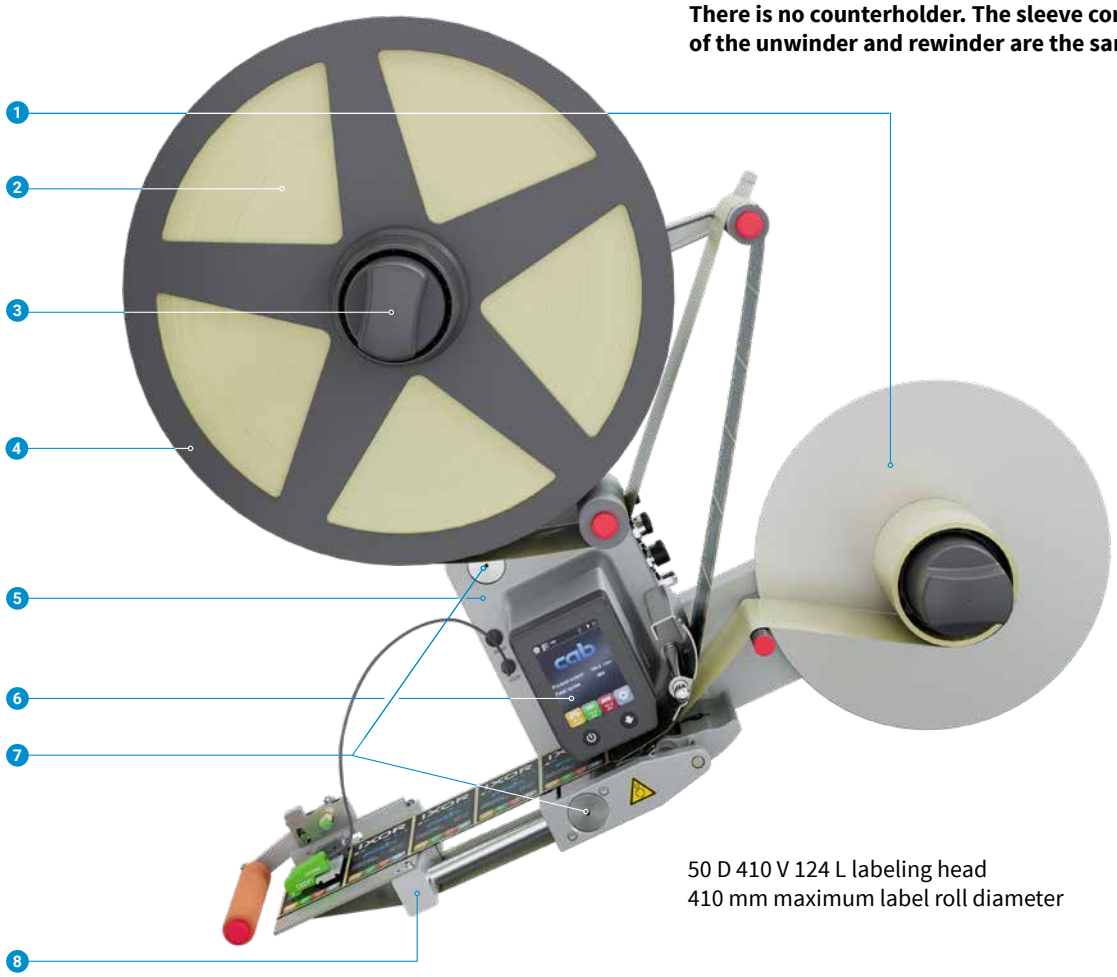

50 D 410 V 124 L labeling head
410 mm maximum label roll diameter

1. **Rewinder**
   The liner is wound when labels have been dispensed. A pendulum arm and an integral clutch keep the liner under constant tension in subsequence to the drive roller.
2. **Unwinder**
   picking up label rolls with a maximum diameter of 410 mm. A pendulum arm and an integral brake keep a label web under constant tension.
3. **Sleeve retainer**
   Turning the handle tensions and releases the label roll sleeve.
4. **Unit retainers**
   for securing and guiding a label roll when installed in vertical orientation. For this purpose, the sleeve retainer is designed 62 mm longer than in horizontal installation.
5. **Base unit**
   It is the center of a labeling head and contains the drive roller for feeding a label web, a brushless servo motor and the system control including the operation panel.
6. **Operation panel**
   Color 3.5" LCD touchscreen
   Rotation by 180° enables overhead installation.
7. **Pick-up spots**
   for assembly onto columns with a diameter of 30 mm. Label positions on a product can thus be set transversely to its direction of running.
8. **Demand unit**
   It can be configured for specific applications using a comprehensive modular system.

Labeling head

Motoric unwinders and rewinders

for label webs running as fast as
- 75 m/min with a mechanical unwinder, motoric rewinder
- 120 m/min with a motoric unwinder and a motoric rewinder, 200 m/min upon request

Roll diameter 410 mm (510 mm upon request)

Modular construction:
A base unit, unwinder and rewinder are installed on a mounting strip. The modules can be positioned also on a carrier plate according to customer specifications.

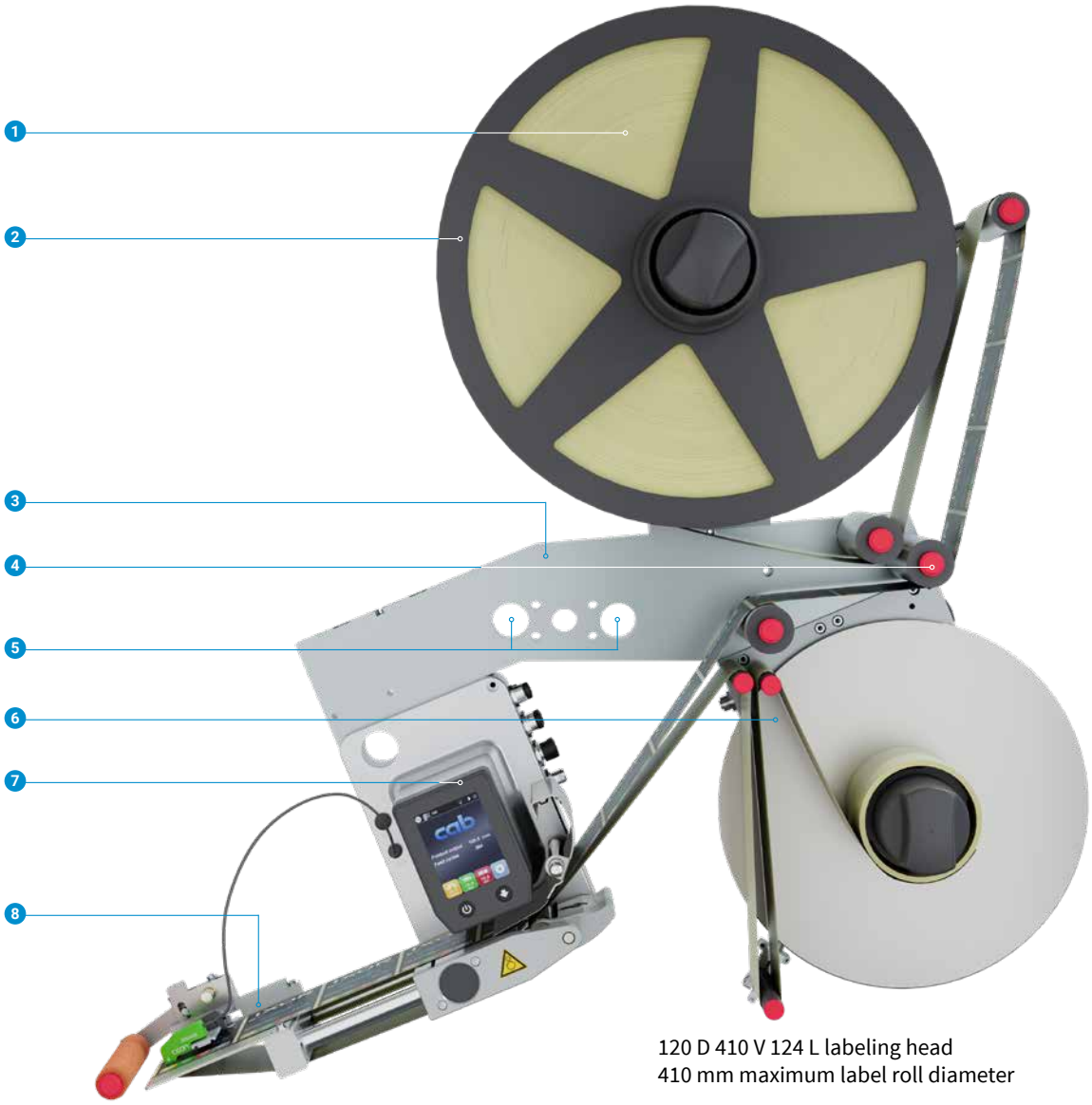

120 D 410 V 124 L labeling head
410 mm maximum label roll diameter

1 **Mechanical or motoric unwinder**
picking up label rolls with a maximum diameter of 410 mm (510 mm upon request). With a motoric unwinder in use, the roll is driven by an integral brushless torque motor. The label web unwinds according to the pendulum arm. A label web speed is automatically activated as soon as the motoric unwinder has been connected.

2 **Counterholder**
for securing and guiding a label roll when installed in vertical orientation. For this purpose, the sleeve retainer is designed 62 mm longer than in horizontal installation.

3 **Mounting strip**
for assembling a base unit, motoric unwinder, rewinder

4 **Deflection rollers**
They are guiding a label web from a motoric unwinder to the base unit.

5 **Pick-up spots**
for assembly onto a column stand. Label positions on a product can thus be set transversely to its direction of running.

6 **Motoric rewinder**
The liner is wound when labels have been dispensed. A pendulum arm and an integral brushless torque motor keep a label web under constant tension in subsequence to the drive roller. Any kind of installation is possible. A label web speed is automatically activated as soon as the motoric rewinder has been connected.

7 **Base unit**
It is assembled to the mounting strip. A PowerBus module is installed for connecting motoric winders.

8 **Demand unit**
It can be configured specific to applications using a comprehensive modular system.

Operation panel

ROXI IXOR+

Intuitive and easy to operate
Rotatable by 180°, depending on the installation of a unit.

Unit configuration with the help of self-explanatory symbols on the user interface

Status bar
Speed, label winding, length of label feed, WLAN, start / stop signal

Operational and warning notes
Status and menu parameters

Counter and diagnostics
Configurable specified to an application

Quick menu
Stop delay
Start delay
Label web speed

Settings

ON / OFF

Pre-dispense

Label web speed
Synchronicity with speed of items
SPEED

Label position on an item
Multiple labeling
Start condition
START

Label stop on a demand module
Missing labels detected
Processing an external stop condition
STOP

Print settings
Control of an external printer or a label transfer module
PRINT

Label transfer settings
Control of optional applicators, air jet boxes, etc.
APPLY

System settings
Display, language, label web ending, interfaces
SYSTEM

User configuration
Any number of formats
Backup and restore by a PC
FORMAT

Charge counter
Automatic stop subsequent to a specified number of items
CHARGE

Service tools
Maintenance assistant, video tutorials, input and control of digital I/O for service purposes
SERVICE

Firmware

ROXI IXOR+

Embedded Linux operating system

- Support 'out-of-the-box' of Open Source bundles and interfaces, such as FTP, SSL, Avahi/Zeroconf
- Regular updates for hotfixes and official CVE security patches
- Comprehensive release notes with each update

Compatibility of labeling heads

- Same codebase on ROXI and IXOR+
- Identical firmware file in preparation
- Further developments are immediately available on every unit.

Maintenance and diagnostics

- Web Interface
- Event log for activity tracking
- Diagnostics files in standardized XML text format

Interfaces and user-specific features

	USB stick	Web interface	FTP software
Access to entire documentation of a unit	✓	✓	✓
Backup and restore	✓	✓	✓
Configuration reading and import	✓	✓	✓
Firmware update	✓		✓

VNC LAN / WLAN
Remote control by a PC, smartphone, tablet

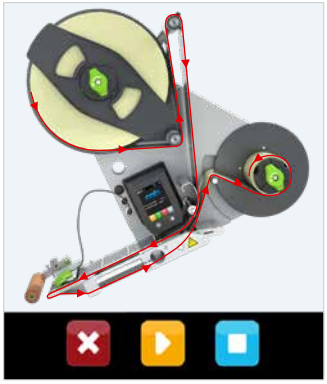

Feed path schemes
On display

Upgrades

- Protocols such as MQTT as well as features like the masterencoder can be unlocked by key (online purchase).

Remote support

- Diagnostics service by use of an existing customer network
- Special software oscilloscope, maximum resolution 1 ms, for unlimited use during production

Integral Ethernet protocols for higher-level machine control systems

- **MQTT, ModBus TCP**
- **OPC UA**
- **Profinet** available from quarter 1/2026
- Access via PLC and an industrial PC to parameters, I/O signals, error messages
- Unlocked by key

Redundancy

- Two labeling heads can be operated redundantly and continually in an Ethernet network.
- While one dispenser actively applies labels onto items, another unit is on standby. In cases of a malfunction on an active unit (e.g. a label web ending), the second takes over immediately.
- All items located between the units are labeled.
- The product sensor and the rotary encoder each are provided once for both labeling heads. Signals are transmitted to both labeling heads via a distributor.
- An adapter is required for Ethernet connection.
- Unlocked by key

Interfaces

ROXI

1 Power plug

2 Cold device socket

3 Two USB hosts
for a warning light, an external operation panel, USB / WLAN stick

4 Ethernet
TCP/IP data transmission

5 START
By signal, for example a product sensor

6 I/O
Compliant to IEC/EN 61131-2, type 1+3
All inputs and outputs protect from reverse polarity.
Outputs are also short-circuit proof

7 SYNC
A label web is synchronized by a masterencoder (rotary
→ linear upon request) to the speed of an item on a conveyor

Digital inputs
Labeling head ON
Pre-dispense
Start labeling
Start labeling locked
Error reset
User-defined

Analog inputs
Speed
Start delay
Stop delay

Digital PNP outputs
Labeling head ready
Pre-dispense
Stop label feed
Label feed running
Label missing on liner
End of label web
Prior warning to label web ending
Error
User-defined

Status indications on the operation panel

all inputs and outputs

Helpful with initial setup, especially when integrating
a labeling head in external control systems

Inputs and outputs can be simulated
or forced for testing purposes.

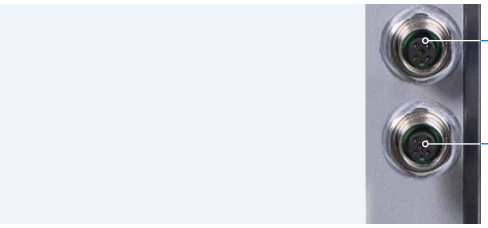

8 PRINT & APPLY
Peripheral interface for plugging a printer and
controlling a transfer unit with 24 VDC

9 STOP
Plug of a label sensor for detecting the
leading edge of a label optically or inductively

Plug and PIN assignment compatible with IXOR+

Interfaces

IXOR+

Motoric unwinder, rewinder

1 END/DIM
Mechanical unwinder sensor input
Prior warning to a label web ending, label web ending, broken liner

2 Ethernet
TCP/IP data transfer

3 I/O
Compliant to IEC/EN 61131-2, type 1+3
All inputs and outputs protect from reverse polarity.
Outputs are also short-circuit proof

Digital inputs
Labeling head ON
Pre-dispense
Start labeling
Start labeling locked
Error reset
User-defined

Analog inputs
Speed
Start delay
Stop delay

Digital PNP outputs
Labeling head ready
Pre-dispense
Stop label feed
Label feed running
Label missing on liner
End of label web
Prior warning to label web ending
Error
User-defined

Status indications on the operation panel
all inputs and outputs
Helpful with initial setup, especially when integrating
a labeling head in external control systems

Inputs and outputs can be simulated
or forced for testing purposes.

4 START
By signal, for example a product sensor

5 APPLY
USB host (via adapter cable)
Peripheral interface for plugging a printer and
controlling a transfer unit according to 9
I/O, configurable with two inputs and one output
Compliant to IEC/EN 61131-2, type 1+3
All inputs and outputs protect from reverse polarity.
Outputs are also short-circuit proof.
An external operation panel or a warning light
may be as well plugged.

6 SYNC
A label web is synchronized by a masterencoder (rotary
→ linear upon request) to the speed of an item on a conveyor

7 POWER IN
Input voltage 100 V to 240 V, 50 Hz to 60 Hz

8 WLAN
integral to the operation panel

9 PRINT & APPLY
Peripheral interface for plugging a printer and
controlling a transfer unit with 24 VDC

10 STOP
Plug of a label sensor for detecting the
leading edge of a label optically or inductively

11 PowerBus IN
Input voltage 100 V to 240 V, 50 Hz to 60 Hz

12 PowerBus OUT
Output voltage 100 V to 240 V, 50 Hz to 60 Hz

○ Plug and PIN assignment compatible with ROXI

Technical data

ROXI

Width of a roll on ROXI		mm max.	60	120	180
Label web speed		m/min max.	30	30	30[2]
Cycle rate		labels/min	It is determined by the length of a label and the speed of an item running on a conveyor and can be simulated on the operation panel.		
Installation			vertical / horizontal		
Direction to which labels are provided			L = to the left, R = to the right		
Material[1]					
Label		on a roll	paper, synthetics PET, PE, PP, PVC / booklets upon request		
	Width	mm	10 - 56	10 - 116	10 - 176
	Length at feeding	mm	10 - 6,000		
	Gap	mm at least	2		
	Thickness	mm	0.055 - 1.0		
Liner	Width	mm	15 - 60	15 - 120	15 - 180
Roll	Weight	kg max.	12		
Unwinder	Outside diameter	mm	310		
	Core diameter	mm	76		
	Winding		outside or inside		
Rewinder	Outside diameter	mm	210		
	Core diameter	mm	76		
Label sensor					
		Features	detection of label margins and materials ending		
Distance to locating edge	CEON	mm	9 - 30	9 - 60	9 - 90
	GAB 500-1	mm	7.5 - 17.5		
	GAB 500-2	mm	8 - 40		
Operating data					
Voltage			100 - 240 V~, 50 - 60 Hz		
Current consumption			100 VAC up to 2 A / 240 V up to 1 A		
Temperature / humidity		Operation	5° - 40 °C / 10 % - 85 %, not condensing		
		Stock	0° - 60 °C / 20 % - 85 %, not condensing		
		Transport	–25° - 60 °C / 20 % - 85 %, not condensing		
Approvals			CE, FCC Class A, ICES-3		
		in preparation	cULus, CB		
Protection class			IP 40		
Operation panel					
		LED	ON / OFF, FEED		
	LCD graphics display	Width x Height mm	54 x 70		
Control					
			Prior warning to a label web ending, broken liner torque, temperature, voltage		

[1] Limitations can occur when processing small labels, thin materials or materials using a strong adhesive. Such applications require testing.
[2] Calculated using a roll as wide as 180 mm and labels 98 mm long. Other dimensions require testing.

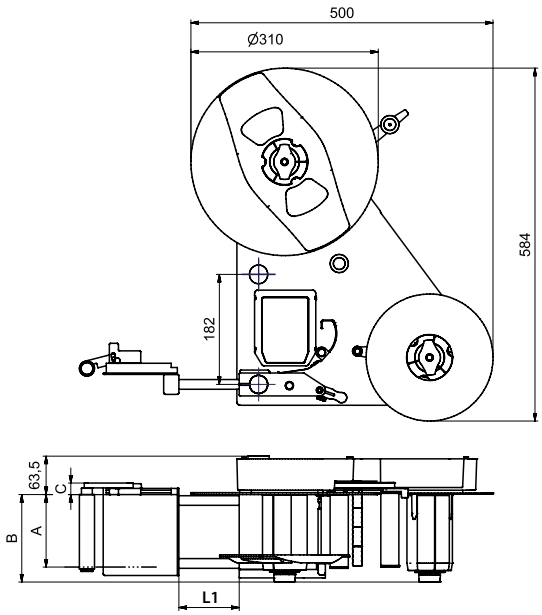

Labeling head	Dimensions A mm	Dimensions B mm	Weights kg
ROXI 60	60	140	11.5
ROXI 120	120	145	12
ROXI 180	180	205	13

Demand module	Dimensions C mm
SP	19
SPE	24
SPFA	19

Mounting rod	Dimensions L1 mm
MS 25	25
MS 100	100
MS 200	200
MS 300	300
MS 400	400

Scopes of delivery, designs and technical data correspond to the date of this publication. They are subject to change. Catalogue data do not represent any warranty or guarantee.

Technical data

IXOR+

Width of a roll on IXOR+		mm max.	62	124	186
Label web speed when operating					
mechanical unwinder, rewinder		m/min max.	50		
mech. unwinder, motoric rewinder		m/min max.	75		
motoric unwinder, rewinder		m/min max.	120 (200 upon request)		
Cycle rate		labels/min	It is determined by the length of a label and the speed of an item running on a conveyor and can be simulated on the operation panel.		
Installation			vertical / horizontal		
Direction to which labels are provided			L = to the left, R = to the right		
Material[1]					
Label		on a roll	paper, synthetics PET, PE, PP, PVC / booklets upon request		
	Width	mm	10 - 58	10 - 120	10 - 182
	Length at feeding	mm	10 - 6,000		
	Gap	mm at least	2		
	Thickness	mm	0.055 - 1.0		
Liner	Width	mm	15 - 62	15 - 124	15 - 186
Roll	Weight	kg max.	15		
Unwinder	Outside diameter	mm	mechanical 310, 410 / motoric 410 (510 upon request)		
	Core diameter	mm	76		
	Winding		outside or inside		
Rewinder	Outside diameter	mm	mechanical 210, 290 / motoric 310 (410 upon request)		
	Core diameter	mm	92		
Label sensor					
		Features	detection of label margins and materials ending		
Distance to locating edge	CEON	mm	9 - 30	9 - 60	9 - 90
	GAB 500-1	mm	7.5 - 17.5		
	GAB 500-2	mm	8 - 40		
Operating data					
Voltage			100 - 240 V~, 50 - 60 Hz		
Current consumption			100 VAC up to 5 A / 240 VAC 2,5 A		
Temperature / humidity		Operation	5° - 40 °C / 10 % - 85 %, not condensing		
		Stock	0° - 60 °C / 20 % - 85 %, not condensing		
		Transport	–25° - 60 °C / 20 % - 85 %, not condensing		
Approvals			CE, FCC Class A, ICES-3, cULus, CB		
Protection class			IP 66		
Operation panel					
		LED	ON / OFF, FEED		
	LCD graphics display	Width x Height mm	54 x 70		
Control					
			Prior warning to a label web ending, label web ending, broken liner torque, temperature, voltage		

[1] Limitations can occur when processing small labels, thin materials or materials using a strong adhesive. Such applications require testing.

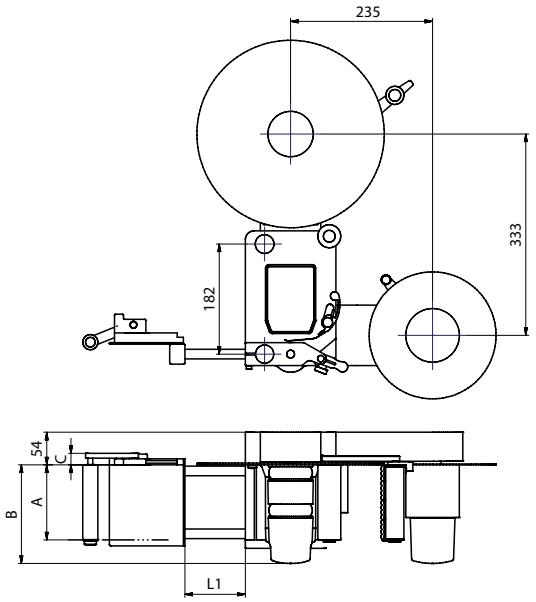

	Dimensions A mm	Dimensions B mm Installation vertical	Dimensions B mm Installation horizontal
Width of a roll	62	163	163
	124	225	163
	186	287	225

Demand module	Dimensions C mm
SP	19
SPE	24
SPFA	19

Mounting rod	Dimensions L1 mm
MS 25	25
MS 100	100
MS 200	200
MS 300	300
MS 400	400

Scopes of delivery, designs and technical data correspond to the date of this publication. They are subject to change. Catalogue data do not represent any warranty or guarantee.

Demand units

ROXI IXOR+

They have a modular design.

Settings for wipe-down rollers, brushes and sensors can be reproduced using scales.

All adjustments can be made with a Torx screwdriver even during labeling.

Wear parts such as wipe-down rollers and brushes can be replaced without additional tools for maintenance or cleaning, so can deflection rollers.

Adaptation in five steps:

1. Demand module

A label is inserted from the side.
A module cam be configured as required.

2. Carriage

It is used for adjusting the distance of a wipe-down roller respectively brush to the peel-off plate.

3. Wipe-down roller or brush

Labels when attached insert are precisely applied onto items using a roller or a brush. These can be precisely tailored to an item for optimum labeling.

4. Mounting rods

They are assembled both to the profiles of a demand module and a labeling head.

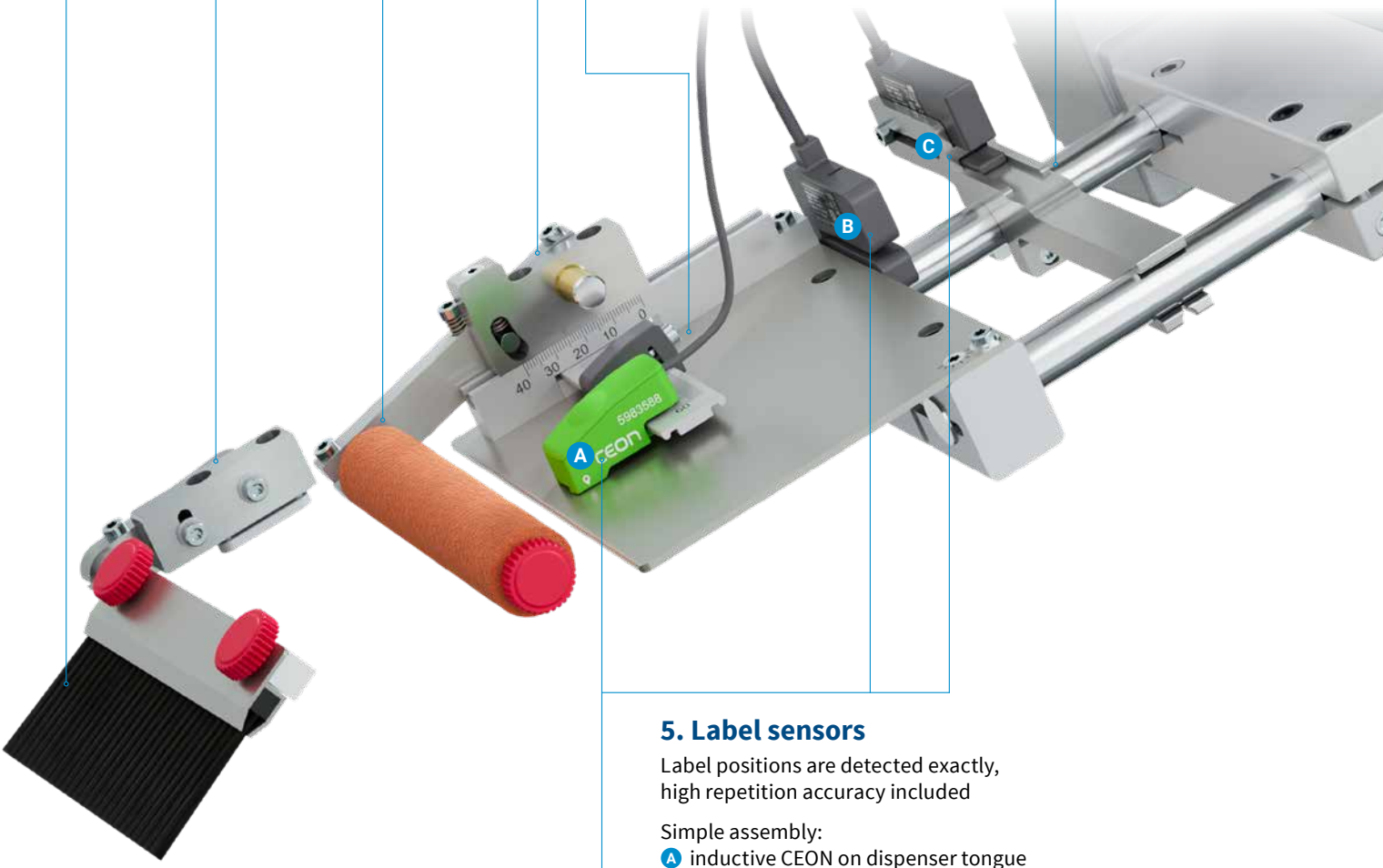

5. Label sensors

Label positions are detected exactly, high repetition accuracy included

Simple assembly:
- A inductive CEON on dispenser tongue
- B Forked light barrier GAB 500-1 on demand module
- C Forked light barrier GAB 500-2 on retainer

Demand modules

ROXI IXOR+

A demand module consists of a dispenser tongue ❶ and a guide ❷.

6.1

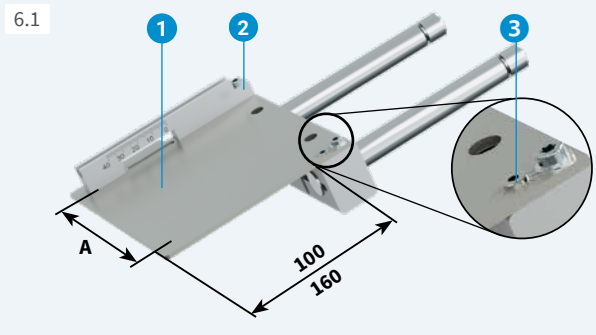

SP demand modules
They are attached to the two mounting rods.
The path of a label web can be aligned even during labeling using an extender ❸.

	Direction to which labels are provided				Dimensions A mm
	Types left		Types right		
Demand module	**SP 100/60L**	**SP 160/60L**	**SP 100/60R**	**SP 160/60R**	62
	SP 100/120L	**SP 160/120L**	**SP 100/120R**	**SP 160/120R**	124
	SP 100/180L	**SP 160/180L**	**SP 100/180R**	**SP 160/180R**	186

6.2

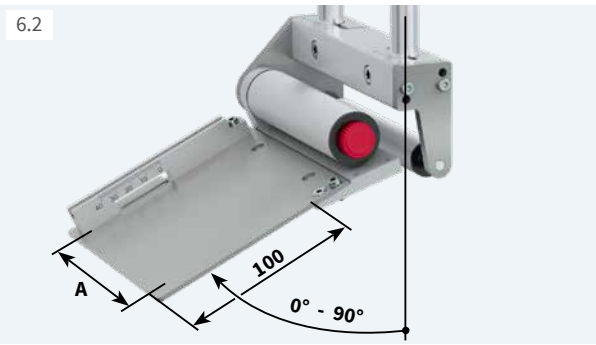

SPE demand modules, adjustable
For better operation or when space is limited, a labeling head may be installed rotated in vertical direction. Applying labels then requires a dispenser tongue continuously adjustable from 0° to 90°.

	Direction to which labels are provided		Dimensions A mm
	Types left	Types right	
Demand module	**SPE 100/ 60L**	**SPE 100/60R**	62
	SPE 100/120L	**SPE 100/120R**	124
	SPE 100/180L	**SPE 100/180R**	186

Dispenser tongue 160 upon request

6.3

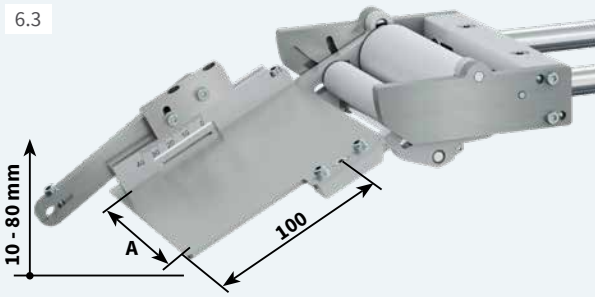

SPFA demand modules, spring-forced, pivotable
When labeling insert onto curved surfaces, a dispenser tongue may adapt to the surfaces and heights of items by spring force.
Pivoting heights can be adjusted from 10 mm to 80 mm.
Use requires a wipe-down roller.

	Direction to which labels are provided		Dimensions A mm
	Types left	Types right	
Demand module	**SPFA 100/60L**	**SPFA 100/60R**	60
	SPFA 100/120L	**SPFA 100/120R**	120
	SPFA 100/180L	**SPFA 100/180R**	180

Dispenser tongue 160 upon request

6.4

upon request

SPZP demand modules, dispenser tongue pneumatically pivotable
The dispenser tongue can be pivoted pneumatically when dealing with sensitive surfaces, when labeling onto cylindrical items or into pockets.
Pivoting heights are 10 mm to 20 mm.
Use requires a wipe-down roller.

	Direction to which labels are provided		Dimensions A mm
	Types left	Types right	
Demand module	**SPZP 100/60L**	**SPZP 100/60R**	60
	SPZP 100/120L	**SPZP 100/120R**	120
	SPZP 100/180L	**SPZP 100/180R**	180

Dispenser tongue 160 upon request

6.5

upon request

SPAP demand modules, wipe-down roller pneumatically pivotable
A wipe-down roller can be pivoted pneumatically when dealing with sensitive surfaces, when labeling onto cylindrical items or into pockets.
Pivoting heights as high as 10 mm

	Direction to which labels are provided		Dimensions A mm
	Types left	Types right	
Demand module	**SPAP 100/60L**	**SPAP 100/60R**	60
	SPAP 100/120L	**SPAP 100/120R**	120
	SPAP 100/180L	**SPAP 100/180R**	180

Dispenser tongue 160 upon request

Carriages, wipe-down rollers and brush

ROXI IXOR+

6.6 - 6.8

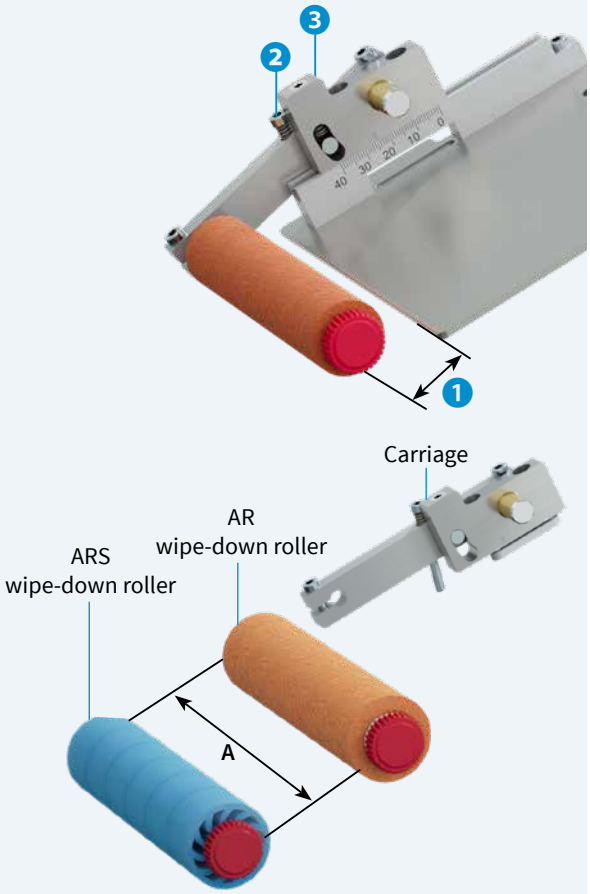

Carriages for assembling a wipe-down roller
They are installed on the guide of a demand module.

Three-part adjustment of wipe-down roller:
1 Distance 5 mm to 40 mm to a peel-off plate
2 Lower end position of roller to an item
3 Wipe-down force onto an item by spring preload

Direction to which labels are provided	Type left	Type right
Carriage	**AL**	**AR**

AR wipe-down rollers
Material: open-cell foam for standard applications
The roller is installed on the lever.
It can be replaced without tools when worn.

	Types	Dimensions A mm
Wipe-down roller	**AR 60**	62
	AR 120	124
	AR 180	186

ARS wipe-down rollers
Material: FDA approved silicone
10 times longer service life compared to open-cell foam
Suitable for food applications and clean rooms
The roller is installed on the lever.
It can be replaced without tools when worn.

	Types	Dimensions A mm
Wipe-down roller	**ARS 40**	41
	ARS 60	62
	ARS 120	124
	ARS 180	186

6.9, 6.10

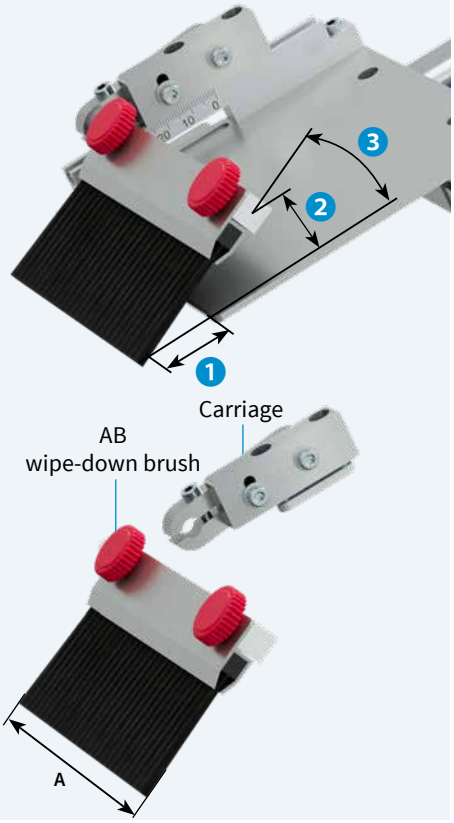

Carriage for assembling a wipe-down brush
It is installed on the guide of a demand module.

Three-part adjustment of wipe-down brush:
1 Distance 1 mm to 35 mm to a peel-off plate
2 Height to a peel-off plate
3 Angle of 15° to 45°

Direction to which labels are provided	Type left and right
Carriage	**B**

AB wipe-down brushes
Use with standard labels at least 20 mm wide and 20 mm high.
The brush is installed directly on the carriage using a square shaft.
It can be replaced without tools when worn.

	Types	Dimensions A mm
Wipe-down brush	**AB 60**	62
	AB 120	124
	AB 180	186

Mounting rods

ROXI IXOR+

6.11

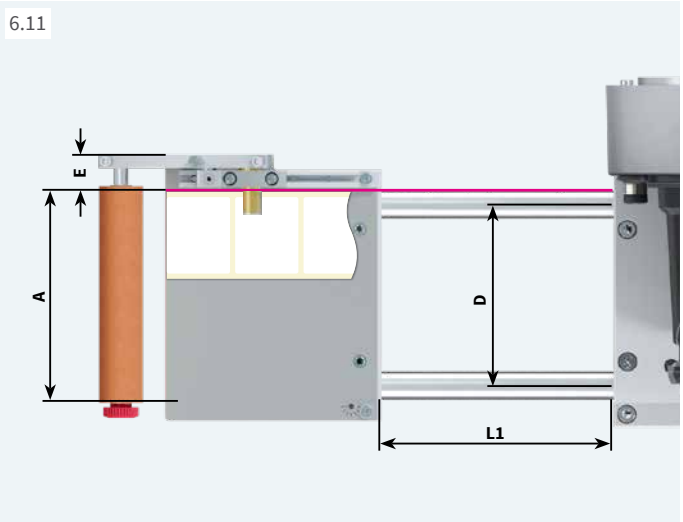

Mounting rods
They connect a labeling head to a demand unit.
Two mounting rods are required per unit.

	Types	Dimensions L1 mm
Mounting rod	**MS 25**	25
	MS 100	100
	MS 200	200
	MS 300	300
	MS 400	400

Further lengths upon request

	Dim. E mm
SP demand module	20
SPE demand module	24
SPFA demand module	20

	Dim. A mm	Dim. D mm
SPxx 60 demand module	60	104
SPxx 120 demand module	120	104
SPxx 180 demand module	180	166

Cross-section profiles

6.12

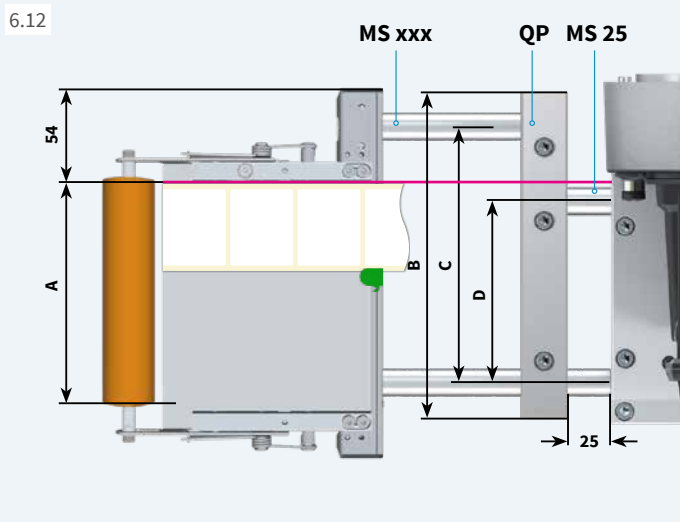

Assembly of IXOR peel-off plates and wipe-down rollers to ROXI
Dimension D is adjusted to C using a QP cross-section profile and MS 25 mounting rods.
MS xxx mounting rods must be shortened by 40 mm.

	Types	Dispenser tongue Dimensions A mm	Dim. B mm	Dim. C mm	Dim. D mm
Profile	**QP 186**	62	186	146	104
	QP 186	124	186	146	104
	QP 248	186	248	208	166
Rod	**MS 25**	–	–	–	–

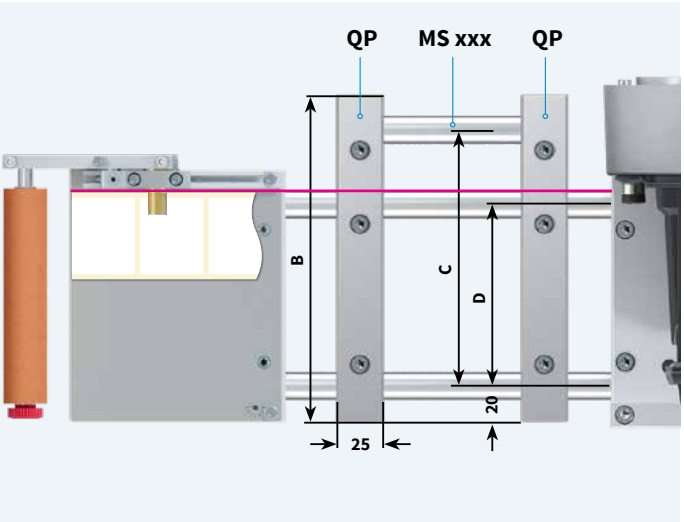

MS xxx as a third mounting rod and further QP cross-section profiles may be added for reinforcing long mounting rods or attaching accessories. Lengths according to application

	Types	Dimensions B mm	Dimensions C mm	Dimensions D mm
Profile	**QP 186**	186	146	104
	QP 248	248	208	166

Sensors

ROXI IXOR+

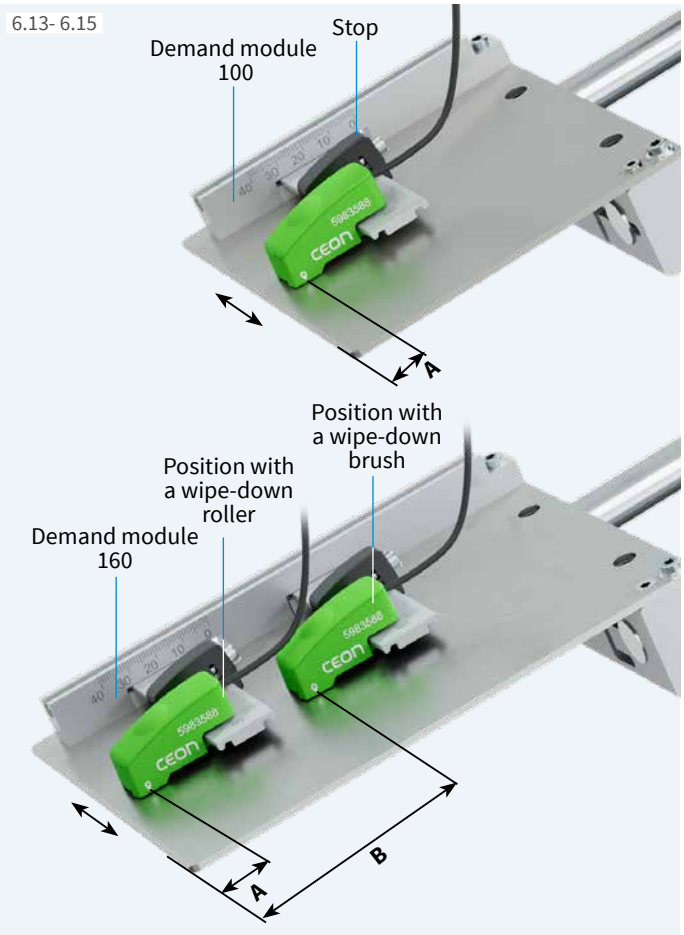

CEON label sensor
It is connected to the labeling head via a smart communication interface. Teaching is performed on the operation panel.
Entire calibration takes just two labels.

A ceramic probe inductively detects the difference in height from a liner to the top of a label. The sensor can be aligned along the retainer bar. Distances can be easily set using a scale.

		CEON label sensor
Functional method		inductive, using a ceramic probe
Material Label		paper, synthetics, opaque or transparent
Liner		opaque, transmissive or transparent
Thickness of a label	mm	0.05 - 1.0
Gap between labels	mm	>2
Accuracy of repetition	mm	± 0.05
Connecting cable	length mm	600

Stop
It is adjustable for accurate spotting after sensor disassembly.

Retainer bar
Three lengths are provided. It is assembled in conjunction with a stop onto the dispenser tongue.
Distance A is optimized for wipe-down rollers and brushes.

	Types	Sensor distant to locating edge mm	With stop in use mm
Retainer bar	**CEON 30**	10 - 30	20 - 30
	CEON 60	10 - 60	20 - 60
	CEON 90	10 - 90	20 - 90
Distance to locating edge	Dimension A is alignable from 14 mm to 24 mm A wipe-down roller is recommended with 14 mm, 24 mm prefers a wipe-down brush.		
	Dimension B 74 mm prefers a wipe-down brush.		

GAB 500-1 forked light barrier
Assembled onto a demand module
Sensor distances to the locating edge are 7.5 mm to 17.5 mm

		GAB 500-1 forked light barrier
Functional method		optical, transmitter / receiver
Material Label		paper, synthetics, opaque
Liner		transmissive, transparent
Material gap	mm	3
Gap between labels	mm	>2
Accuracy of repetition	mm	± 0.05
Range of adjustable distance C to locating edge	mm	7.5 - 17.5

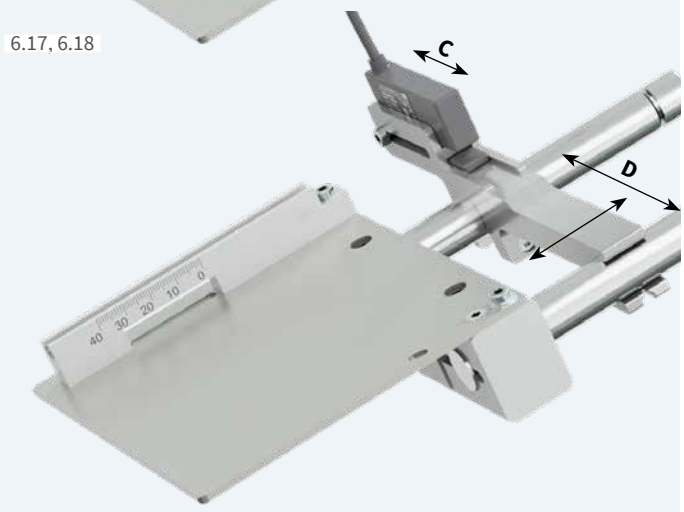

GAB 500-2 forked light barrier
Assembled onto a retainer
Sensor distances to the locating edge are 8.0 mm to 40 mm.

		GAB 500-2 forked light barrier
Functional method		optical, transmitter / receiver
Material Label		paper, synthetics, opaque
Liner		transmissive, transparent
Material gap	mm	5
Gap between labels	mm	>2
Accuracy of repetition	mm	± 0.05
Range of adjustable distance C to locating edge	mm	8.0 - 40

Retainer for assembly at any spot to mounting rods, fixed by screws

	Types	Dimensions D mm
Retainer	**GAB 500-2/124**	104
	GAB 500-2/186	166

Options

ROXI IXOR+

5.1, 5.2

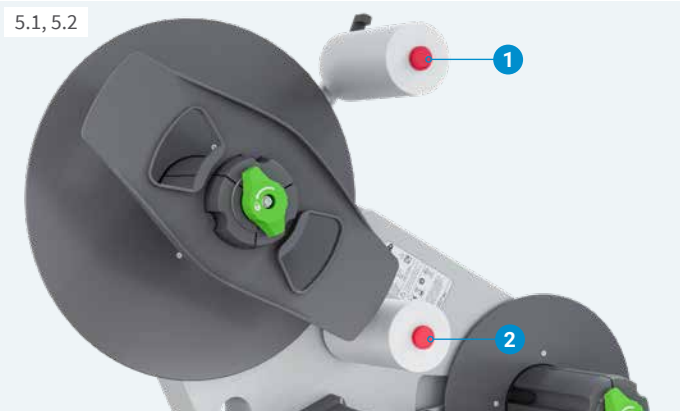

UR D60 deflection rollers
Deflection rollers 1 and 2 with a diameter of 60 mm help with materials that detach from a liner material when bent at a tight radius.

	Types	Diameters mm	Widths B mm
Deflection roller	**UR D60/62**	60	62
	UR D60/124	60	124
	UR D60/186	60	186
Guide	**FR D60**	-	-

2 cannot be installed on an IXOR+ base unit

Anti-stick-coated deflection rollers can be provided upon request.

Accessories

7.1, 7.2

Product sensor
Dispensing a label is triggered as soon as an item has been detected. 200 mm maximum detectable track

Product sensor cable
M12-M8, 5 pins, a-coded, 2.5 m included

7.3

Rotary encoder
Incremental, resolution 0.1 mm, tracked A and B
Connecting cable M12, 5 pins, a-coded, 2.5 m
for automatically synchronizing the speed of labeling
Unlocked by key

7.4

Friction wheel
Circumference 200 mm, diameter 63.7 mm

7.5

Retainer
It presses a friction wheel by spring force onto a conveyor.
Assembly to a conveyor requires a mounting bracket.

7.6

7.7

External operation panel
Same functionality as on a labeling head

Users are free to decide whether to operate an external panel or the one integral to a dispenser.

1 **USB slot**, transmitting configuration or firmware transfer

2 **LED:** Power ON

ROXI: Connecting USB cables 1.8 m, 3 m, 5 m (11 m upon request)
IXOR+: Connecting apply cable 6 m

7.8

Warning light
Plugged to a labeling head

Red Collective error, e.g. label web ending, broken liner
Yellow Prior warning to a label web ending
Green Unit ready

Connecting USB cable 1 m
Plugging to IXOR+ in addition requires a connecting apply cable M12, 12 pins, 0.2 m

Cables and plugs

ROXI IXOR+

7.9

7.10

Cable plug M12, 5 pins, a-coded, male
Circular connector to base unit START, PRINT & APPLY, STOP

Cable jack M12, 5 pins, a-coded, female
Circular connector to base unit SYNC

7.11

7.12

7.13

Distributor / adapter Ethernet for redundant operations

The product sensor and the rotary encoder
each are provided once for both labeling heads.
Signals are transmitted to both labeling heads via a distributor.

Distributor M12, 5 pins, a-coded:
1 x female → 2 x male for a product sensor
1 x male → 2 x female for a rotary encoder

Ethernet connection requires a **RJ45 adapter**.

7.14

7.15

I/O interface cable, wire-end-ferruled
M12, 17 pins, 5 m

Extending I/O cable
M12, 17 pins, 2.5 m, 10 m

7.17

Extending SYNC cable
for rotary encoder, redundancy / M12, 5 pins, a-coded, 2.5 m, 10 m

for CEON and mechanical unwinder on IXOR+, if assembled separately / M12, 5-polig, a-codiert, 0,5 m

Cables

IXOR+

7.18

Connecting APPLY cable for USB host
M12, 12 pins, 0.2 m

7.19

Power cable, wire-end-ferruled
2.5 m, 5 m, 10 m

7.20

Power cable, plugged type E+F
2.5 m

7.21

Ethernet cable
M12, 4 pins, d-coded on RJ45, 2.5 m, 5 m, 10 m

Assembly assistance

ROXI IXOR+

Labeling heads may be installed user-specific into production lines or labeling systems.

Unit retainers with tie rods and column stands with accessories make up a construction kit.

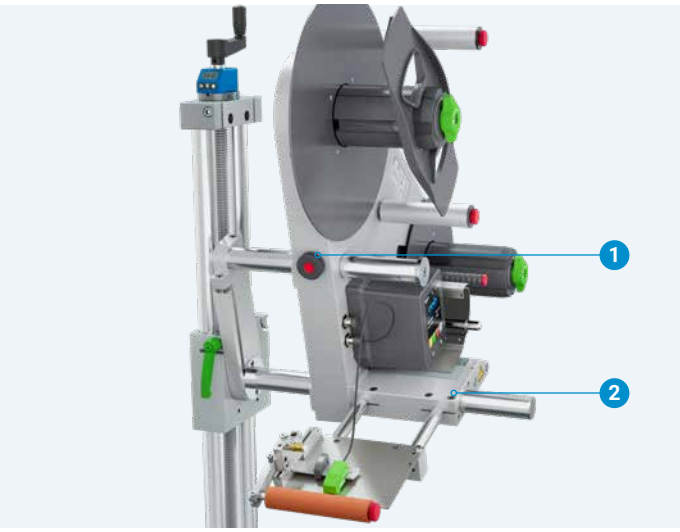

Movable unit retainers

A labeling head is mounted on two columns.
On these, dispensing spots can be adjusted transversely to the direction of product transport.

Fixation
ROXI: on chassis using a knurled screw 1
IXOR+: on mounting strip using a screw 2

Preferred with vertical installation of a labeling head.

Operating the crank when assembling onto a column frame requires a minimum distance of 40 mm between the tie rod and the chassis.

Unit retainers adjustable by spindle

They enable precise dispensing spots.
Adjustments by spindle are possible with labeling heads been installed either vertically or horizontally.
The hand crank enables a dispensing spot shifted by 3 mm per rotation.

Column stand providing an adjusting disc

The column stand ensures a labeling head remain stable even when shifted over a long distance. It can be precisely adjusted to a dispensing spot either in vertical and horizontal installation.

The dispensing angle can be set using the adjusting disc.

Unit retainers

ROXI IXOR+

8.1

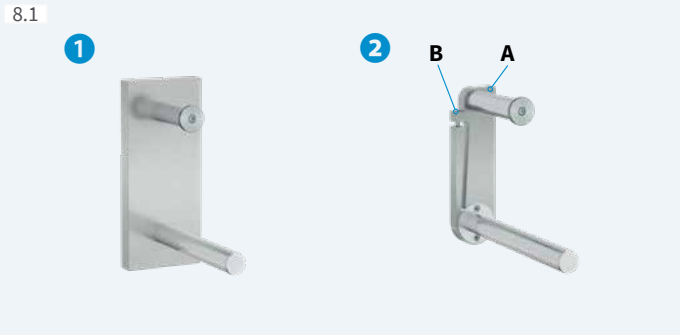

1 Plate / profile assembly

Both rods can be assembled directly onto a plate or a profile.

2 Assembly by tie rod

It allows adjusting the dispensing angle to a product.
The upper rod is clamped to the tie rod and secured by screw A.
The lower rod and the collar bearing are screwed
to the column stand or a plate.

The tie rod can be swiveled on the collar bearing
and locked in place with screw B..

8.2

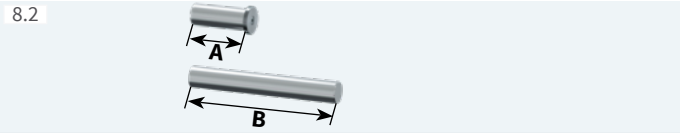

8.4

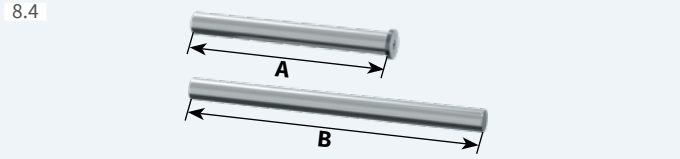

8.5

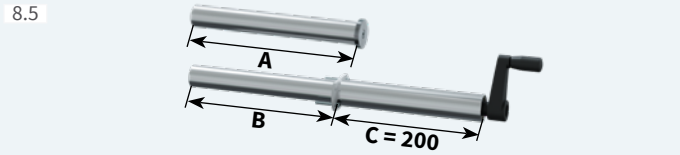

	Types	Adjustable track		Column length	
		Tie rod mm	Plate mm	Dim. A mm	Dim. B mm
Unit retainers fixed	**GHF 120**	0	20	80	226
	GHF 180	0	20	80	288
Unit retainers movable	**GHV 120/100**	100	120	180	325
	GHV 180/100	100	120	180	390
	GHV 120/200	200	220	280	425
	GHV 180/200	200	220	280	490
Unit retainers adjustable by spindle	**GHS 120/150**	150	150	230	225 - 375
	GHS 180/150	150	150	230	286 - 498

Column stands

8.6 - 8.8

1 Column stands

Assembly of a labeling head onto a base plate or a conveyor
Position setting using a hand crank. Column diameter 30 mm

	Types	Column length mm	Adjustable track mm
Column stands	**SST 400**	400	195
	SST 600	600	395
	SST 800	800	595

2 Adjusting disc

It is assembled to the column stand guide.
Another column stand is attached to it rotatable
in vertical direction. Adjustable angles are 0° to 45°

3 Carrier plate with unit retainer fixed

It is screwed onto the front of the column stand guide.
The separate unit retainer can be attached according to
the direction to which labels are provided (left or right).

TP 120 carrier plate
TP 180 carrier plate

Position indication

ROXI IXOR+

8.9

EPOS electronic position indicator

Indication of a label spot on a product

Display settings
- counting up or down
- reset display value
- offset value
- mm or inch
- absolute or incremental

8.10

8.11

Adapter kit

It is required for assembling onto the spindle tube / column stand. The position indicator can be aligned to optimum display regardless of the orientation of assembly of a labeling head. Any kind of installation is possible.

1. **GHS adapter kit** for unit retainers
2. **SST adapter kit** for column stands

Floor stands

8.13

1632 floor stand

Primarily suggested when **applying labels from the top.**
As a mobile tool, it can be locked and set on-site by leveling feet.

		1632 floor stand
Leveling feet	adjustable by mm	± 15
Load	kg max.	50
Load at offset 300 mm	kg max.	25
Distance from lower margin of a label to the floor	mm	880 - 1200
Column stand 600		■
Column length	mm	600
Adjustable track	mm	395
Weight	kg approx.	40

8.14

1231 floor stand

Primarily suggested when **applying labels from the side.** It can be adapted to heights and be locked and set on-site by leveling feet.

		1231 floor stand
Leveling feet	adjustable by mm	± 15
Load	kg max.	50
Load at offset 200 mm	kg max.	20
Distance from lower margin of a label to the floor	mm	664 - 904
Column stand 600		■
Column length	mm	600
Adjustable track	mm	395
Tie rod		■
Unit retainer adjustable by spindle		■
Dimension of adjustability	mm	135
Weight	kg approx.	40

Delivery program

ROXI IXOR+

Labeling heads

If order implies protocols and encoders been unlocked and / or options been assembled ex factory, item numbers are added by .250.

ROXI as fast as 30 m/min

Labels provided to the left

Pos.		Item no.	Designation
1.1		**6130760.xxx**	ROXI 60 L labeling head
1.2		**6130120.xxx**	ROXI 120 L labeling head
1.3		**6130180.xxx**	ROXI 180 L labeling head

Labels provided to the right

Pos.		Item no.	Designation
1.1		**6130765.xxx**	ROXI 60 R labeling head
1.2		**6130125.xxx**	ROXI 120 R labeling head
1.3		**6130185.xxx**	ROXI 180 R labeling head

ROXI labeling head type code index 60 L

Maximum width of a roll: 60 mm, 120 mm, 180 mm

L to the left, R to the right: Labels provided

IXOR+ as fast as 50 m/min

Labels provided to the left

Pos.		Item no.	Designation
2.1		**6130806.xxx**	IXOR+ 50 D310 H 62 L labeling head
		6130808.xxx	IXOR+ 50 D310 H 124 L labeling head
		6130810.xxx	IXOR+ 50 D310 H 186 L labeling head
2.2		**6130800.xxx**	IXOR+ 50 D310 V 62 L labeling head
		6130802.xxx	IXOR+ 50 D310 V 124 L labeling head
		6130804.xxx	IXOR+ 50 D310 V 186 L labeling head
2.3		**6130818.xxx**	IXOR+ 50 D410 H 62 L labeling head
		6130820.xxx	IXOR+ 50 D410 H 124 L labeling head
		6130822.xxx	IXOR+ 50 D410 H 186 L labeling head
2.4		**6130812.xxx**	IXOR+ 50 D410 V 62 L labeling head
		6130814.xxx	IXOR+ 50 D410 V 124 L labeling head
		6130816.xxx	IXOR+ 50 D410 V 186 L labeling head

Labels provided to the right

Pos.		Item no.	Designation
2.1		**6130807.xxx**	IXOR+ 50 D310 H 62 R labeling head
		6130809.xxx	IXOR+ 50 D310 H 124 R labeling head
		6130811.xxx	IXOR+ 50 D310 H 186 R labeling head
2.2		**6130801.xxx**	IXOR+ 50 D310 V 62 R labeling head
		6130803.xxx	IXOR+ 50 D310 V 124 R labeling head
		6130805.xxx	IXOR+ 50 D310 V 186 R labeling head
2.3		**6130819.xxx**	IXOR+ 50 D410 H 62 R labeling head
		6130821.xxx	IXOR+ 50 D410 H 124 R labeling head
		6130823.xxx	IXOR+ 50 D410 H 186 R labeling head
2.4		**6130813.xxx**	IXOR+ 50 D410 V 62 R labeling head
		6130815.xxx	IXOR+ 50 D410 V 124 R labeling head
		6130817.xxx	IXOR+ 50 D410 V 186 R labeling head

IXOR+ labeling head type code index 50 D410 V 124 L

Maximum label web speed: 50 m/min

Maximum roll diameter: 310 mm, 410 mm

L to the left, R to the right: Labels provided

62 mm, 124 mm, 186 mm: Maximum width of a roll

horizontal, vertical: Installation

Scope of delivery
ROXI / IXOR+ labeling head ROXI: Type E+F power cable, 1.8 m Knowledge Base

Labeling heads and demand units are delivered unassembled in one package.

Provided online
Assembly instructions DE / EN / FR Configuration manuals DE / EN / FR Service manuals DE / EN Spare parts lists DE / EN Programming manual EN https://setup.cab.de/en

See current data also on the Internet:
www.cab.de/en/labeling-heads

Delivery program

ROXI IXOR+

Labeling heads

If order implies protocols and encoders been unlocked and / or options been assembled ex factory, item numbers are added by .250.

IXOR+ as fast as 75 m/min

Labels provided to the left

Pos.		Item no.	Designation
2.5		**6130836.xxx**	IXOR+ 75 D410 H 62 L labeling head
		6130838.xxx	IXOR+ 75 D410 H 124 L labeling head
		6130840.xxx	IXOR+ 75 D410 H 186 L labeling head
2.6		**6130830.xxx**	IXOR+ 75 D410 V 62 L labeling head
		6130832.xxx	IXOR+ 75 D410 V 124 L labeling head
		6130834.xxx	IXOR+ 75 D410 V 186 L labeling head

Labels provided to the right

Pos.		Item no.	Designation
2.5		**6130837.xxx**	IXOR+ 75 D410 H 62 R labeling head
		6130839.xxx	IXOR+ 75 D410 H 124 R labeling head
		6130841.xxx	IXOR+ 75 D410 H 186 R labeling head
2.6		**6130831.xxx**	IXOR+ 75 D410 V 62 R labeling head
		6130833.xxx	IXOR+ 75 D410 V 124 R labeling head
		6130835.xxx	IXOR+ 75 D410 V 186 R labeling head

IXOR+ as fast as 120 m/min

Labels provided to the left

Pos.		Item no.	Designation
2.7	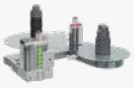	**6130856.xxx**	IXOR+ 120 D410 H 62 L labeling head
		6130858.xxx	IXOR+ 120 D410 H 124 L labeling head
		6130860.xxx	IXOR+ 120 D410 H 186 L labeling head
2.8		**6130850.xxx**	IXOR+ 120 D410 V 62 L labeling head
		6130852.xxx	IXOR+ 120 D410 V 124 L labeling head
		6130854.xxx	IXOR+ 120 D410 V 186 L labeling head

Labels provided to the right

Pos.		Item no.	Designation
2.7		**6130857.xxx**	IXOR+ 120 D410 H 62 R labeling head
		6130859.xxx	IXOR+ 120 D410 H 124 R labeling head
		6130861.xxx	IXOR+ 120 D410 H 186 R labeling head
2.8		**6130851.xxx**	IXOR+ 120 D410 V 62 R labeling head
		6130853.xxx	IXOR+ 120 D410 V 124 R labeling head
		6130855.xxx	IXOR+ 120 D410 V 186 R labeling head

IXOR+ labeling head type code index 75 D410 V 124 L

- 75: Maximum label web speed 75 m/min, 120 m/min
- D410: Maximum roll diameter 310 mm
- V: horizontal, vertical — Installation
- 124: 62 mm, 124 mm, 186 mm — Maximum width of a roll
- L: L to the left, R to the right — Labels provided

Protocols and encoders

If order implies unlocking ex factory, item numbers are added by .250.
In cases of separate unlocking, .001 is added.

Pos.		Item no.	Designation
4.1		**5581022.xxx**	FQ MQTT
			FM ModBus
			FP Profinet (in preparation)
			FO OPC UA Server
4.2		**5581023.xxx**	FR MQTT redundancy
4.3		**5581020.xxx**	ME Masterencoder

Scope of delivery
ROXI / IXOR+ labeling head Knowledge Base

Labeling heads and demand units are delivered unassembled in one package.

Provided online
Assembly instructions DE / EN / FR Configuration manuals DE / EN / FR Service manuals DE / EN Spare parts lists DE / EN Programming manual EN https://setup.cab.de/en

Options

If order implies assembly ex factory, item numbers are added by .250.
In cases of separate delivery, .001 is added.

Pos.		Item no.	Designation
5.1		**5908002.xxx**	UR D60/62 deflection roller
		5907996.xxx	UR D60/124 deflection roller
		5907995.xxx	UR D60/186 deflection roller
5.2		**6130629.xxx**	FR D60 guide

Delivery program

ROXI IXOR+

If order implies demand units and its components been assembled ex factory, item numbers are added by .250. In cases of separate delivery, .001 is added.

Demand units

Labels provided to the left

Pos.		Item no.	Designation
6.1		**6130656.xxx**	SP 100/60L demand module
		6130657.xxx	SP 100/120L demand module
		6130658.xxx	SP 100/180L demand module
		6130650.xxx	SP 160/60L demand module
		6130651.xxx	SP 160/120L demand module
		6130652.xxx	SP 160/180L demand module
6.2		**6130662.xxx**	SPE 100/60L demand module
		6130663.xxx	SPE 100/120L demand module
		6130664.xxx	SPE 100/180L demand module
6.3		**6130468.xxx**	SPFA 100/60L demand module
		6130304.xxx	SPFA 100/120L demand module
		6130553.xxx	SPFA 100/180L demand module
6.4	upon request	**6130478.xxx**	SPZP 100/60L demand module
		6130479.xxx	SPZP 100/120L demand module
		6130555.xxx	SPZP 100/180L demand module
6.5	upon request	**6130531.xxx**	SPAP 100/60L demand module
		6130532.xxx	SPAP 100/120L demand module
		6130533.xxx	SPAP 100/180L demand module

Labels provided to the right

Pos.		Item no.	Designation
6.1		**6130659.xxx**	SP 100/60R demand module
		6130660.xxx	SP 100/120R demand module
		6130661.xxx	SP 100/180R demand module
		6130653.xxx	SP 160/60R demand module
		6130654.xxx	SP 160/120R demand module
		6130655.xxx	SP 160/180R demand module
6.2		**6130665.xxx**	SPE 100/60R demand module
		6130666.xxx	SPE 100/120R demand module
		6130667.xxx	SPE 100/180R demand module
6.3		**6130477.xxx**	SPFA 100/60R demand module
		6130310.xxx	SPFA 100/120R demand module
		6130554.xxx	SPFA 100/180R demand module
6.4	upon request	**6130481.xxx**	SPZP 100/60R demand module
		6130482.xxx	SPZP 100/120R demand module
		6130556.xxx	SPZP 100/180R demand module
6.5	upon request	**6130536.xxx**	SPAP 100/60R demand module
		6130537.xxx	SPAP 100/120R demand module
		6130538.xxx	SPAP 100/180R demand module

Pos.		Item no.	Designation
6.6		**6130648.xxx**	AL carriage
		6130649.xxx	AR carriage
6.7		**6130460.xxx**	AR 60 wipe-down roller
		6130461.xxx	AR 120 wipe-down roller
		6130462.xxx	AR 180 wipe-down roller
6.8		**6130620.xxx**	ARS 40 wipe-down roller
		6130621.xxx	ARS 60 wipe-down roller
		6130622.xxx	ARS 120 wipe-down roller
		6130623.xxx	ARS 180 wipe-down roller
6.9		**6130616.xxx**	B carriage
6.10		**6130463.xxx**	AB 60 wipe-down brush
		6130464.xxx	AB 120 wipe-down brush
		6130551.xxx	AB 180 wipe-down brush
6.11		**6120069.xxx**	MS 25 mounting rod
		5972418.xxx	MS 100 mounting rod
		5972419.xxx	MS 200 mounting rod
		5972420.xxx	MS 300 mounting rod
		6120067.xxx	MS 400 mounting rod
6.12		**6130520.xxx**	QP 186 cross-section profile
		6130521.xxx	QP 248 cross-section profile

Pos.		Item no.	Designation
6.13		**5983588.xxx**	CEON label sensor
6.14		**6130600.xxx**	CEON 30 retainer bar, stop included
		6130601.xxx	CEON 60 retainer bar, stop included
		6130602.xxx	CEON 90 retainer bar, stop included
6.15		**6130582.xxx**	CEON stop
6.16		**6130452.xxx**	GAB 500-1 forked light barrier
6.17		**5918670.xxx**	GAB 500-2 forked light barrier
6.18		**6130690.xxx**	500-2/124 retainer
		6130704.xxx	500-2/186 retainer

Wear parts

Pos.		Item no.	Designation
6.19		**6127895.001**	60 wipe-down roller
		6127896.001	120 wipe-down roller
		6127897.001	180 wipe-down roller
6.20		S 20 wipe-down roller **6127710.001**	2 x for ARS 40 wipe-down roller
			3 x for ARS 60 wipe-down roller
			6 x for ARS 120 wipe-down roller
			9 x for ARS 180 wipe-down roller
6.21		**6130572.001**	60 wipe-down brush
		6130580.001	120 wipe-down brush
		6130573.001	180 wipe-down brush
6.22		**5983437.001**	CEON probe

Delivery program

ROXI IXOR+

Accessories

Pos.		Item no.	Designation
7.1		**5918702.001**	Product sensor
7.2		**5918671.001**	Product sensor cable M12-M8, 4 pins, a-coded, 2.5 m
7.3		**5918979**	Rotary encoder Connecting cable 2.5 m included
7.4		**5918981**	Friction wheel
7.5		**5918980**	Retainer
7.6		**6010186**	External operation panel
7.7		**5907718.001**	ROXI: Connecting USB cable 1.8 m
		5907730.001	ROXI: Connecting USB cable 3 m
		5907750.001	ROXI: Connecting USB cable 5 m
		5551007.001	IXOR+: Connecting USB cable 6 m
7.8		**6010560**	Warning light Connecting USB cable 1 m included

Plugs

Pos.		Item no.	Designation
7.9		**5918483.001**	Cable plug M12, 5 pins, a-coded, male
7.10		**5918480.001**	Cable jack M12, 5 pins, a-coded, female
7.11		**5918797.001**	Distributor for product sensor M12, 5 pins, a-coded 1 x female → 2 x male
7.12		**5918485.001**	Distributor for rotary encoder M12, 5 pins, a-coded 1 x male → 2 x female
7.13		**5918732.001**	RJ45 Ethernet adapter

Cables

Pos.		Item no.	Designation
7.14		**5918948.001**	I/O interface cable, wire-end-ferruled M12, 17 pins, 5 m
7.15		**5918421.001**	Extending I/O cable M12, 17 pins, 2.5 m
		5918941.001	Extending I/O cable M12, 17 pins, 10 m
7.17		**5918757.001**	Extending SYNC cable M12, 5 pins, a-coded, 0.5 m
		5918475.001	Extending SYNC cable M12, 5 pins, a-coded, 2.5 m
		5918942.001	Extending SYNC cable M12, 5 pins, a-coded, 10 m

IXOR+

Pos.		Item no.	Designation
7.18		**5918936.001**	Connecting apply cable for USB host M12, 12 pins , 0.2 m
7.19		**5918758.001**	Power cable, wire-end-ferruled 2.5 m
		5918947.001	Power cable, wire-end-ferruled 5 m
		5918943.001	Power cable, wire-end-ferruled 10 m
7.20		**5918531.001**	Power cable, plugged type E+F 2.5 m
7.21		**5918665.001**	Ethernet cable M12, 4 pins, d-coded on RJ45, 2.5 m
		5918946.001	Ethernet cable M12, 4 pins, d-coded on RJ45, 5 m
		5918945.001	Ethernet cable M12, 4 pins, d-coded on RJ45, 10 m

Delivery program

ROXI IXOR+

If order implies components of assembly assistance been assembled ex factory, item numbers are added by .250. In cases of separate delivery, .001 is added.

Assembly assistance

Pos.		Item no.	Designation
8.1		**6130411.001**	Tie rod
8.2		**6130737.001**	GHF 120 unit retainer
		6130754.001	GHF 180 unit retainer
8.3		**6130741.001**	GHV 120/100 unit retainer
		6130756.001	GHV 180/100 unit retainer
8.4		**6130744.001**	GHV 120/200 unit retainer
		6130758.001	GHV 180/200 unit retainer
8.5		**6130747.001**	GHS 120/150 unit retainer
		6130762.001	GHS 180/150 unit retainer
8.6		**5983420.xxx**	SST 400 column stand
		5983421.xxx	SST 600 column stand
		5983422.xxx	SST 800 column stand
8.7		**5972532.001**	Adjusting disc
8.8		**6131005.001**	TP 120 carrier plate
		6131006.001	TP 180 carrier plate
8.9		**5919809.xxx**	EPOS electronic position indicator
8.10		**6131010.xxx**	GHS adapter kit for unit retainers
8.11		**6131015.xxx**	SST adapter kit for column stands

Floor stands

Pos.		Item no.	Designation
8.12		**5983425**	1632 floor stand SST 600 column stand included
8.13		**5983426**	1231 floor stand

Delivery program

IXOR+

Labeling head components

If order implies components of labeling heads been assembled ex factory, item numbers are added by .250. In cases of separate delivery, .001 is added.

IXOR+ 50 base units

Labels provided to the left

Pos.		Item no.	Designation
3.1		**6130774.xxx**	IXOR+ 60 L base unit
3.2		**6130776.xxx**	IXOR+ 120 L base unit
3.3		**6130778.xxx**	IXOR+ 180 L base unit

Labels provided to the right

Pos.		Item no.	Designation
3.1		**6130775.xxx**	IXOR+ 60 R base unit
3.2		**6130777.xxx**	IXOR+ 120 R base unit
3.3		**6130779.xxx**	IXOR+ 180 R base unit

Mechanical winders

Labels provided to the left

Pos.	Orientation of assembly V	H	Item no.	Designation
3.4			**5983326.xxx**	D310 H 62 L unwinder
			5983300.xxx	D310 H 124 L unwinder
			5983302.xxx	D310 H 186 L unwinder
			6122000.xxx	D310 V 62 L unwinder
			5983312.xxx	D310 V 124 L unwinder
			5983314.xxx	D310 V 186 L unwinder
3.5			**5983328.xxx**	D410 H 62 L unwinder
			5983306.xxx	D410 H 124 L unwinder
			5983308.xxx	D410 H 186 L unwinder
			6122002.xxx	D410 V 62 L unwinder
			5983318.xxx	D410 V 124 L unwinder
			5983320.xxx	D410 V 186 L unwinder
3.6			**6122030.xxx**	D210/62 L rewinder
			6122034.xxx	D210/124 L rewinder
			6122038.xxx	D210/186 L rewinder
3.7			**6122032.xxx**	D290/62 L rewinder
			6122036.xxx	D290/124 L rewinder
			6122040.xxx	D290/186 L rewinder

Labels provided to the right

Pos.	Orientation of assembly V	H	Item no.	Designation
3.4			**5983327.xxx**	D310 H 62 R unwinder
			5983301.xxx	D310 H 124 R unwinder
			5983303.xxx	D310 H 186 R unwinder
			6122001.xxx	D310 V 62 R unwinder
			5983313.xxx	D310 V 124 R unwinder
			5983315.xxx	D310 V 186 R unwinder
3.5			**5983329.xxx**	D410 H 62 R unwinder
			5983307.xxx	D410 H 124 R unwinder
			5983309.xxx	D410 H 186 R unwinder
			6122003.xxx	D410 V 62 R unwinder
			5983319.xxx	D410 V 124 R unwinder
			5983321.xxx	D410 V 186 R unwinder
3.6			**6122031.xxx**	D210/62 R rewinder
			6122035.xxx	D210/124 R rewinder
			6122039.xxx	D210/186 R rewinder
3.7			**6122033.xxx**	D290/62 R rewinder
			6122037.xxx	D290/124 R rewinder
			6122041.xxx	D290/186 R rewinder

IXOR+ 75/120 base units

Labels provided to the left

Pos.		Item no.	Designation
3.8		**6130974.xxx**	IXOR+ 60 L M base unit
3.9		**6130976.xxx**	IXOR+ 120 L M base unit
3.10		**6130978.xxx**	IXOR+ 180 L M base unit

Labels provided to the right

Pos.		Item no.	Designation
3.8		**6130975.xxx**	IXOR+ 60 R M base unit
3.9		**6130977.xxx**	IXOR+ 120 R M base unit
3.10		**6130979.xxx**	IXOR+ 180 R M base unit

Motoric winders

Labels provided to the left

Pos.	Orientation of assembly V	H	Item no.	Designation
3.11			**5983596.xxx**	D410 H 62 L M unwinder
			5983501.xxx	D410 H 124 L M unwinder
			5983502.xxx	D410 H 186 L M unwinder
			5983592.xxx	D410 V 62 L M unwinder
			5983505.xxx	D410 V 124 L M unwinder
			5983506.xxx	D410 V 186 L M unwinder

Pos.		Item no.	Designation
3.12		**5983594.xxx**	D310/62 L M rewinder
		5983531.xxx	D310/124 L M rewinder
		5983532.xxx	D310/186 L M rewinder

Labels provided to the right

Pos.	Orientation of assembly V	H	Item no.	Designation
3.11			**5983597.xxx**	D410 H 62 R M unwinder
			5983540.xxx	D410 H 124 R M unwinder
			5983541.xxx	D410 H 186 R M unwinder
			5983593.xxx	D410 V 62 R M unwinder
			5983544.xxx	D410 V 124 R M unwinder
			5983545.xxx	D410 V 186 R M unwinder

Pos.		Item no.	Designation
3.12		**5983595.xxx**	D310/62 R M rewinder
		5983570.xxx	D310/124 R M rewinder
		5983571.xxx	D310/186 R M rewinder

Accessories

Pos.		Item no.	Designation
3.13		**5983324.xxx**	Counterholder 310 mm
		5983325.xxx	Counterholder 410 mm

Type code	D410	H	124	L	M

Maximum roll diameters 410 mm

Installation vertical V horizontal H

62 mm 124 mm 186 mm Maximum roll diameter

L to the left R to the right

Motoric

Delivery program

IXOR+

If order implies components of labeling heads been assembled ex factory, item numbers are added by .250. In cases of separate delivery, .001 is added.

Accessorial components for labeling heads on mounting strips or customer-specific plates

Pos.		Item no.	Designation
3.14		**6120016.xxx**	Compact mounting strip
3.15		**6127290.xxx**	D30 AL 62 deflection roller
		6127291.xxx	D30 AL 124 deflection roller
		6127292.xxx	D30 AL 186 deflection roller
		6127295.xxx	D38 AL 62 deflection roller
		6127296.xxx	D38 AL 124 deflection roller
		6127297.xxx	D38 AL 186 deflection roller
		6127311.xxx	D60 AL 62 deflection roller
		6127312.xxx	D60 AL 124 deflection roller
		6127313.xxx	D60 Al 186 deflection roller

For mechanical unwinders, CEON

Pos.		Item no.	Designation
3.16		**5918757.001**	Extending SYNC cable M12, 5 pins, a-coded, 0.5 m

For motoric unwinders and rewinders

Pos.		Item no.	Designation
3.17		**5918944.001**	Connecting PowerBus cable M12, 4 pins, 0.3 m
		5918879.001	Connecting PowerBus cable M12, 4 pins, 0.8 m
		5918426.001	Connecting PowerBus cable M12, 4 pins, 2.5 m

Final assembly, setup and system testing

Pos.		Item no.	Designation
3.18		**6129050.250**	IXOR+ 50 final assembly and setup
		6129075.250	IXOR+ 75 final assembly and setup
		6129120.250	IXOR+ 120 final assembly and setup
		6129100.250	System testing with customer labels

Packaging

Pos.		Item no.	Designation
3.19		**6123310.001**	IXOR+ 50 D310 packaging
		6123410.001	IXOR+ 50 D410 packaging
		6123510.001	IXOR+ 75/120 packaging

Accessories for assembling onto customer-specific plates

Pos.		Item no.	Designation
3.16		**6127288.001**	Spacer bolt for deflection roller
3.17		**6110902.001**	Attachment unit for mechanical unwinder
3.18		**6120017.001**	Spacer for motoric unwinder, rewinder

Overview of cab products

Label printers
MACH1, MACH2

Label printers
EOS 2

Label printers
EOS 5

Label printers
MACH 4S

Label printers
SQUIX 2

Label printers
SQUIX 4

Label printers
SQUIX 6.3

Label printers
SQUIX 8.3

Label printers
XD Q double-sided

Label printers
XC Q two-colored

Print and apply systems
HERMES Q

Print and apply systems
Hermes C two-colored

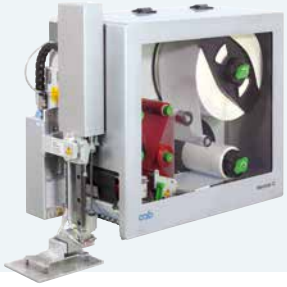

Tube labeling systems
AXON 1

Print modules
PX Q

Labels and ribbons

Label software
cablabel S3

Labeling heads
HS, VS

Labeling heads
IXOR

Marking lasers
XENO 4

Laser marking systems

See product information on **www.cab/en**

Germany
cab Produkttechnik GmbH & Co KG
Karlsruhe
Phone +49 721 6626 0
www.cab.de

France
cab Technologies S.à.r.l.
Niedermodern
Phone +33 388 722501
www.cab.de/fr

USA
cab Technology, Inc.
Chelmsford, MA
Phone +1 978 250 8321
www.cab.de/us

Mexico
cab Technology, Inc.
Juárez
Phone +52 656 682 4301
www.cab.de/es

Taiwan
cab Technology Co., Ltd.
Taipei
Phone +886 (02) 8227 3966
www.cab.de/tw

China
cab (Shanghai) Trading Co., Ltd.
Shanghai
Phone +86 (021) 6236 3161
www.cab.de/cn

Singapore
cab Singapore Pte. Ltd.
Singapore
Phone +65 6931 9099
www.cab.de/en

South Africa
cab Technology (Pty) Ltd.
Randburg
Phone +27 11 886 3580
www.cab.de/za

cab // **820** distribution and service partners in more than **80** countries

we identify more

© cab/9004257